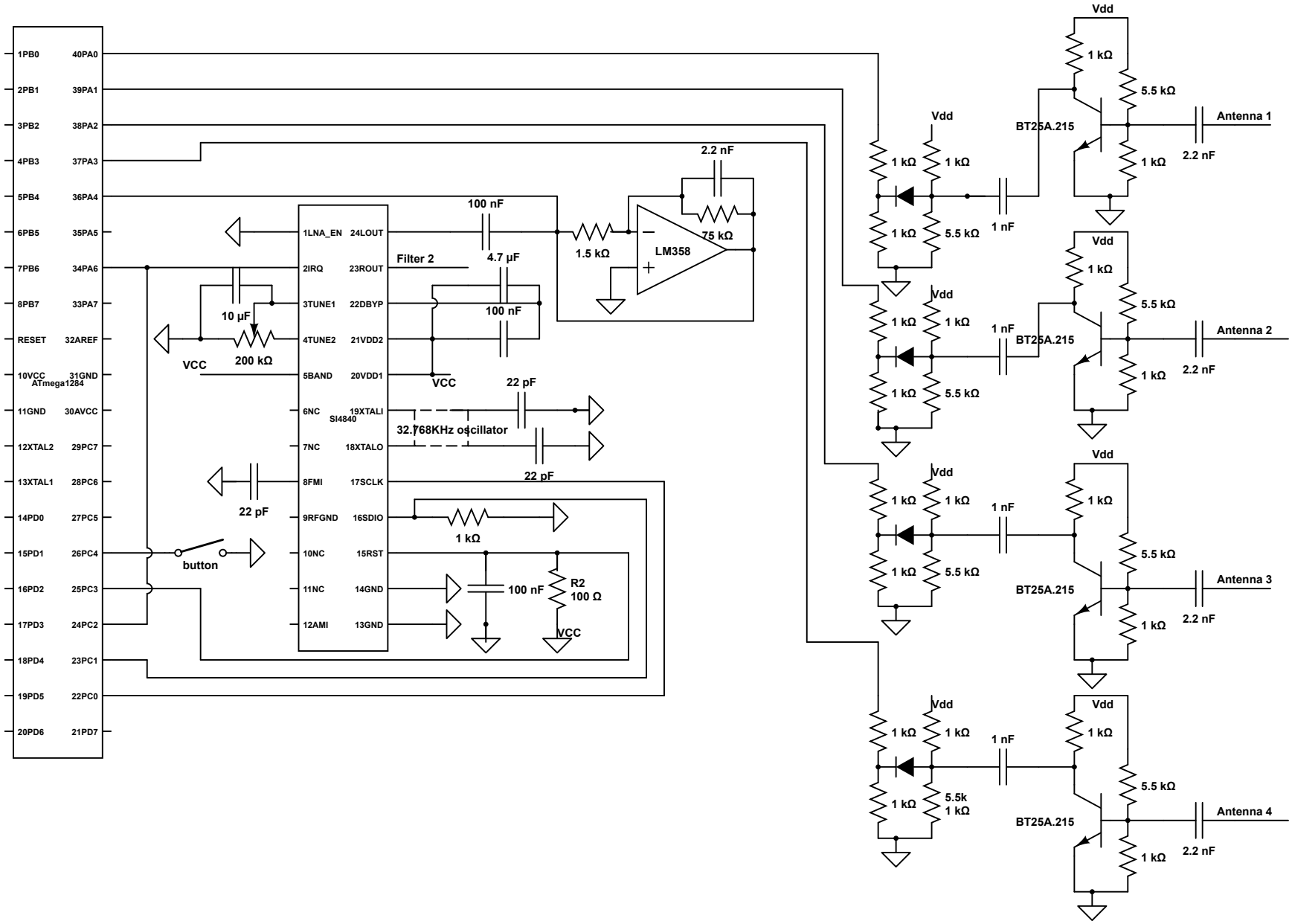
1PB0
2PB1
3PB2
4PB3
5PB4
6PB5
7PB6
8PB7
RESET
10VCC
11GND
12XTAL2
13XTAL1
14PD0
15PD1
16PD2
17PD3
18PD4
19PD5
20PD6
40PA0
39PA1
38PA2
37PA3
36PA4
35PA5
34PA6
33PA7
32AREF
31GND
30AVCC
29PC7
28PC6
27PC5
26PC4
25PC3
24PC2
23PC1
22PC0
21PD7
ATmega1284
1LNA_EN
2IRQ
3TUNE1
4TUNE2
5BAND
6NC
7NC
8FMI
9RFGND
10NC
11NC
12AMI
24LOUT
23ROUT
22DBYP
21VDD2
20VDD1
19XTALI
18XTALO
17SCLK
16SDIO
15RST
14GND
13GND
SI4840
Filter 2
100 nF
4.7 µF
1.5 kΩ
2.2 nF
75 kΩ
LM358
10 µF
200 kΩ
VCC
22 pF
32.768KHz oscillator
1 kΩ
button
R2
100 Ω
Vdd
5.5 kΩ
BT25A.215
1 nF
Antenna 1
Antenna 2
Antenna 3
Antenna 4
5.5k